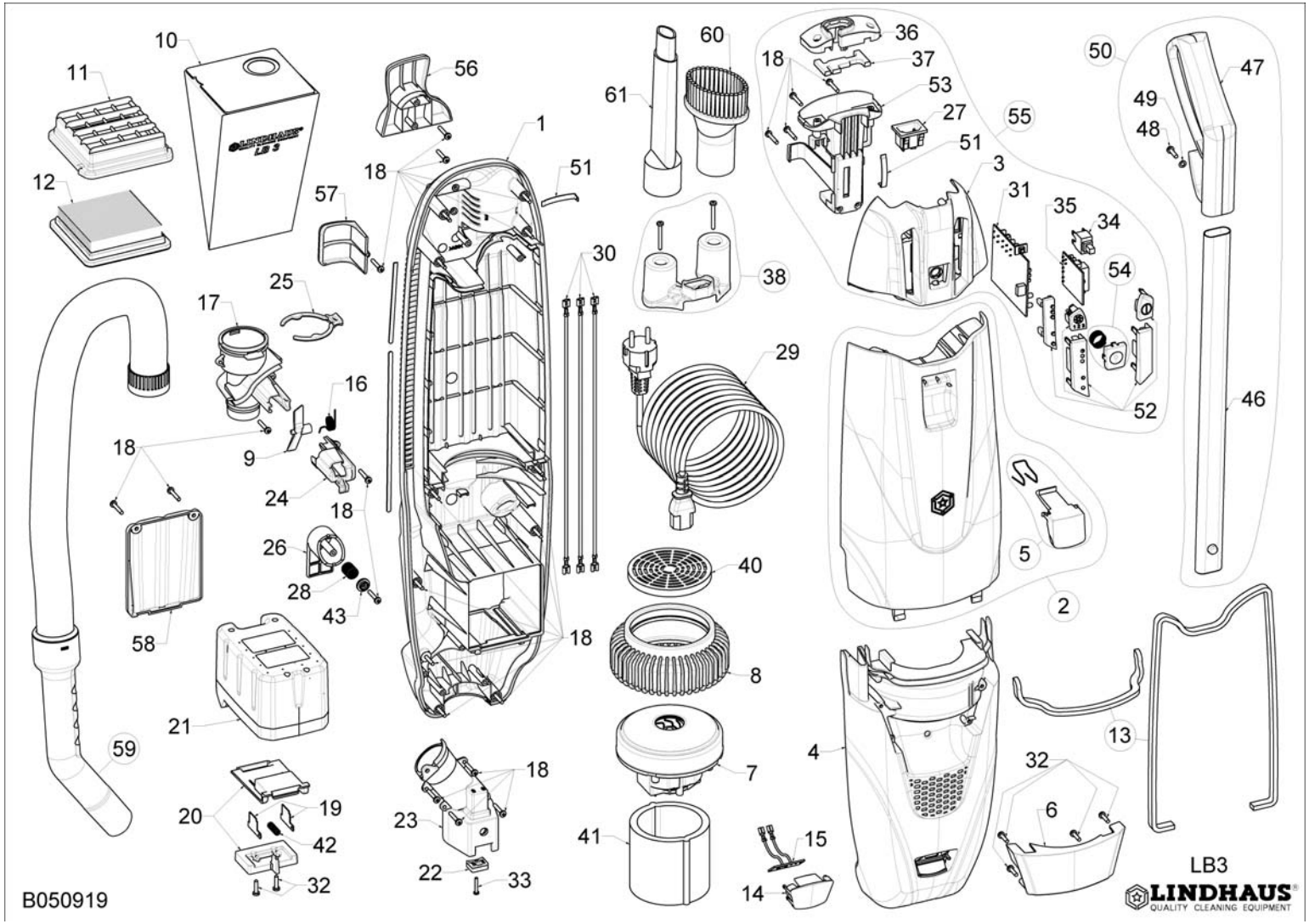

	LB3 – Valzer – Karisma Digital Pro L-ion - Electric
POS.	DESCRIPTION
26	LOWER CORD HOOK
27	MALE CONNECTOR (2 or 3 PINS)
28	SPRING LOWER CORD HOOK (WRAP. 10 PCS.)
29	CABLE
30	WIRES KIT
31	CIRCUIT BOARD DIGITAL V.36 Pro - Dom
31	CIRCUIT BOARD DIGITAL V.230 Pro - Dom
31	CIRCUIT BOARD DIGITAL V.100-120 Pro - Dom
32	SCREWS 3,5X16 (WRAP. 20 PCS.)
33	SCREWS 2,9X16 (WRAP. 20 PCS.)
34	MAIN SWITCH
35	DISTRIBUTION BOARD V.36
35	DISTRIBUTION BOARD V.230
35	DISTRIBUTION BOARD V.100-120
36	PLUG RETAINER
37	SAFETY PLATE
38	ACCESSORIES HOLDER KIT
40	MOTOR PROTECTION GRILL
41	FILTER SOUND ABSORBENT
42	SPRING BATTERY (WRAP. 10 PCS.)
46	WAND + BUTTON
47	HANDLE LB3 – Valzer - Karisma
48	SCREW 3,9X16 (WRAP. 20 PCS)
49	STAR WASHER (WRAP. 20 PCS)
50	HANDLE COMPLETE
51	GROUND PLATE HOSE (WRAP. 10 PCS.)
52	BUTTONS/LENS KIT
53	WAND SUPPORT
54	HANDLE BUTTON+SPRING KIT
56	TOP HOSE HOLDER
57	SIDE HOSE HOLDER
58	CLOSING DOOR
59	EXTENSION HOSE
60	SWIVEL DUSTING
61	TELESCOPIC CREVICE
NOTE	

POS.	DESCRIPTION	POS.	DESCRIPTION	POS.	DESCRIPTION
1	BAG HOUSING	7	VACUUM MOTOR DIGITAL (36VDC-340W)	16	SPRING SAFETY LATCH (WRAP. 10 PCS.)
2	BAG COVER COMPLETE LB3	7	VACUUM MOTOR DIGITAL (230V-500W)	17	BAG SUPPORT
2	BAG COVER COMPLETE Valzer	7	VACUUM MOTOR DIGITAL (120V-500W)	18	SCREW 3,5X22 (WRAP. 20 PCS)
2	BAG COVER COMPLETE Karisma	8	GASKET MOTOR	19	CONTACTS BATTERY (WRAP. 20 PCS)
3	ELECTRIC PANEL BOX LB3-Valzer-Karisma	9	SAFETY LATCH (WRAP. 10 PCS.)	20	BATTERY SUPPORT KIT
4	MOTOR HOUSING COVER LB3	10	LB3 BAG WRAPPING (10+1)	21	BATTERY 36V-6Ah
4	MOTOR HOUSING COVER Valzer	12	HEPA FILTER	22	CONTACT RETAINER (WRAP. 10 PCS)
4	MOTOR HOUSING COVER Karisma	13	GASKET (1 MT.)	23	CONNECTOR NOZZLE
5	BAG DOOR LATCH KIT LB3-Valzer-Karisma	14	LED COVER	24	BAG HOLDER
6	CENTRAL HANDLE LB3-Valzer-Karisma	15	LED KIT	25	HOSE RETAINER